ASSOCIATED HOBBY MANUFACTURERS, INC.

(A Subsidiary of General Hobbies Corp.)

5012 B Chicago & North Western
5012 C Great Northern
5012 D Soo
5012 E Reading
5012 F Santa Fe
5012 G Illinois Central
5012 H Frisco
5012 I Norfolk & Western 1–776
5012 J Norfolk & Western
5012 K Chessie System
5012 L Lehigh Valley
5012 M Erie Lackawanna

SPARE COUPLER INCLUDED FREE FOR YOUR CONVENIENCE

EMD GP-18 DIESEL LOCOMOTIVE

First introduced in 1959, the 1800HP GP—18 diesel was an improved and more powerful version of the units which had preceeded It . . . the GP—7 and GP—9 models. Production lasted three years, at which time, it was superceeded by more powerful versions also. The »GP« designation indicates a »general purpose« engine, and this is exactly what the GP—18 was . . . for it was used for freight, passenger, and switching duties by various railroads. No matter how you use our AHM model of this diesel, the real ones performed the same tasks, and you will find this HO scale version to be as versatile and as reliable as the prototype was.

GUARANTEE

AHM locomotives are guaranteed against all factory defects in material or in workmanship for one year from the date of purchase. All locomotives have been thoroughly tested. AHM's guarantee will be void if the locomotive has been subject to misuse or accident, or if a repair or alteration has been made by other than an AHM Parts Depot, or by the AHM factory

AHM's gurantee does not apply to electric light bulbs used in headlights, or to finishes on the locomotives, except where defects can be proven to have occured at the time of manufacture. If you live in an area where no local AHM Parts Depot exists, you may return any defective unit to the factory. Be sure to mail the guaranteed registration card directly to the factory immediately. AHM's guarantee is void if it is not on file at the factory.

SERVICE AND REPAIR NOT COVERED BY GUARANTEE

If you live in an area where no AHM Parts Depot exists, and you wish to have the unit or units repaired at the factory, be sure to carefully pack the unit, and include a money order or check for $2.50 to cover minimum factory service and handling charges. The $2.50 will cover all minor repairs, any necessary adjustments, the repacking and return postage to you. If major repairs must be undertaken and the cost of same, or parts, exceeds the $2.50, you will be notified of the difference prior to the work being undertaken by the factory.

GP-18 PARTS LIST

P-325-001	Cab Roof
P-325-002	Window Insert
P-325-003	Body Shell
P-325-004	Bulb Retainer
P-325-005	Retainer Clip
P-325-006	Light Bulb
P-325-007	Rear and Back Mount
P-325-008	Light Holder w/track Mount
P-325-009	Underframe
P-325-010	Body Mount Screw
P-325-011	Gear Box
P-325-012	Pick Ups
P-325-013	Geared Wheel
P-325-014	Truck Frame
P-325-015	Coupler
P-325-016	Weight
P-325-017	Motor Brush Spring Holder
P-325-018	Motor Holder
P-325-019	Motor Brush Spring
P-325-020	Motor
P-325-021	Motor Brush
P-325-022	Motor Shaft
P-325-023	Drive Shaft
P-325-024	Coupling
P-325-025	Hook Up Wire
P-325-026	Bottom Weight
P-325-027	Weight Holder
P-325-028	Worm Gear
P-325-029	Brass Bearing
P-325-030	Washer
P-325-031	Worm Gear Shaft
P-325-032	Side Cover Gear Box Cover
P-325-033	Idler Gear
P-325-034	Idler Gear
P-325-035	Idler Gear

Lubrication

For efficient economical operation, proper lubrication is important.

To lubricate exles, gears and bearings the shell is to be removed Remove the shell by taking out the two screws under the cabin using the screw driver.

Now you can lubricate the bearings of the motor, clasp and the bearings of the trucks.

To lubricate the gears and the bearings of the wheels the lower cover of the track must be removed.

For lubrication use light clock oil only. When finished replace the cover plate paying attention to fit the wheels and the coupler to the right position.

After lubrication fix the shell by the two screws under the cabin.

Lubricate your locomotive once a week if runs many hours, once a month if runs moderately, and if runs only on occasion it is advisable to lubricate before each running.

How to service electric motor

Remove the body from the chassis. Remove the hinge bar, electrical contacts and release the clasp. This will completely separate the motor from the chassis of the locomotive. The motor can now be serviced.

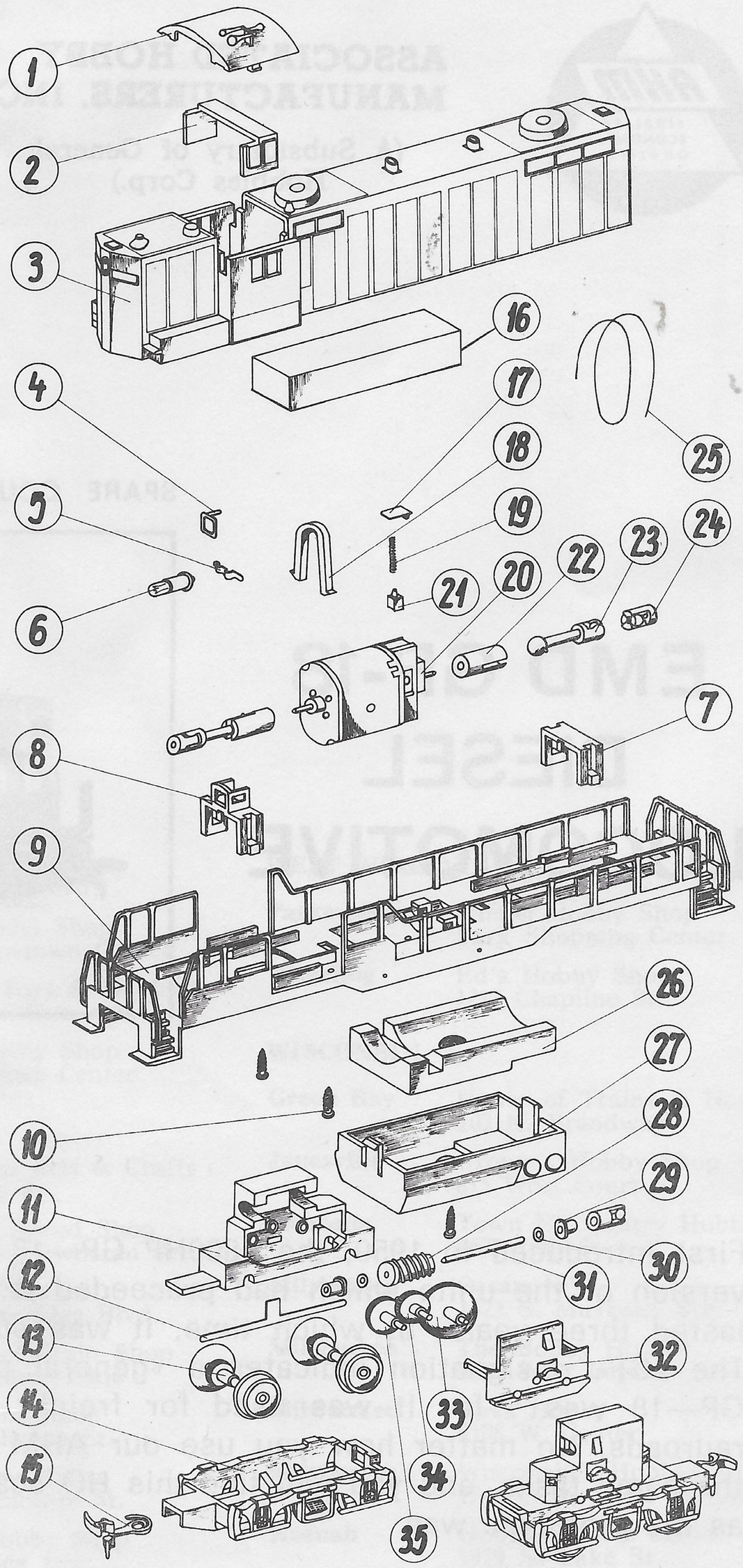

DO NOT REMOVE WORM GEAR UNLESS NECESSARY

ELECTRICAL DATA

Maximum Absorption — 0,30 Ampere

Maximum Voltage — 12 V DC

CAUTION

If it is necessary to overhaul or to replace any parts contact your local AHM Parts Depot.